KOP-2458D6F26-C Dual

[illegible]	[illegible]	[illegible]
[illegible]	нпллпнрлл	рмрлпрурл
[illegible]	т	тфр
[illegible]	осл	осл
[illegible]	нн	мс
[illegible]	Жнфл	
[illegible]	рл	
[illegible]	[illegible]	
[illegible]	нл	
[illegible]	b [illegible]	
[illegible]	[illegible] (бр)	
[illegible]	[illegible] (±5)	
[illegible]	лфоо	
[illegible]	Waпvo	
[illegible]	υплпрл	

[illegible]

нфпDlÎkpDlÎ [illegible]

L999улнфммl·кōкЗ

[illegible]

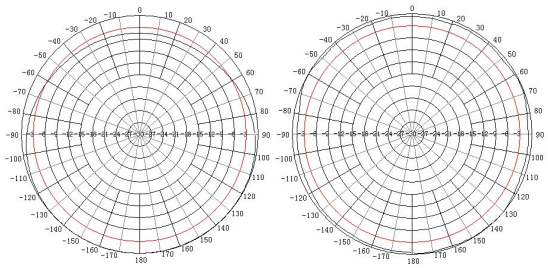

нфпDlÎ l tfl·yŜ pDlÎ l tfl·yŜ

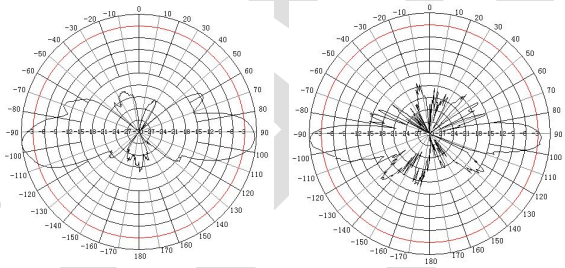

нфпDlÎ 9 tfl·yŜ pDlÎ 9 tfl·yŜ

Эскиз установки

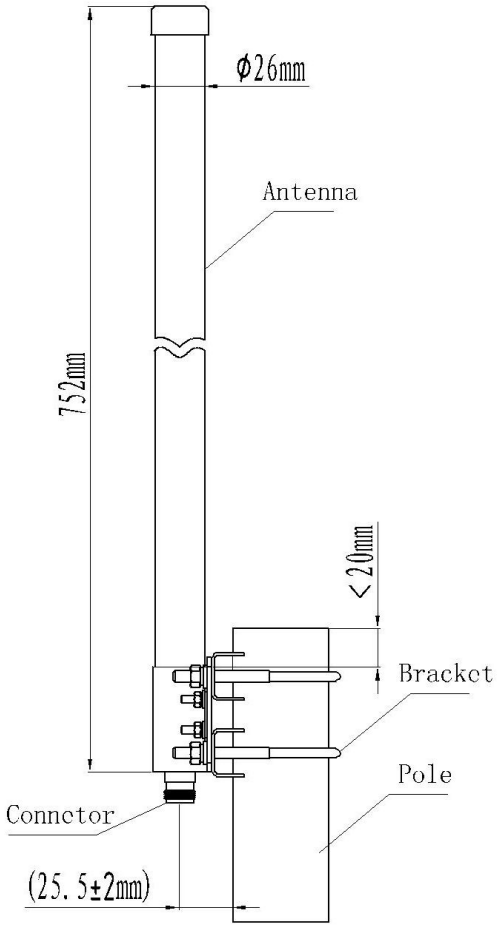

Preview

KBT
Add：No.30 Dongyang 3rd Road, Danzao Town, Nanhai District, Foshan City, Guangdong, China 528216
Tel: +86-757-88022860 Email: kbt@kenbotong.com Web: http://www.kenbotong.com