MAURY

RF Device Characterization Systems

IN THIS CATALOG:

- Maury Device Characterization Software
  - IVCAD
  - ATSv5
  - AMTSv2
- Maury Automated Tuners
- Solid State Noise Parameter Measurement Systems
- Noise Receiver Modules
- Triplexers & Diplexers
- Load Pull Test Fixtures
- Automated Sliding Shorts
- Manual Tuners
- Device Characterization System Integration
- Advanced Device Characterization Systems
- Mixed-Signal Active Load Pull Systems
- Pulsed IV Systems

Your Complete Measurement & Modeling Solutions Partner

Also Available from Maury Microwave –

MAURY

VNA Calibration Kits,
Microwave Components
& Adapters
Catalog

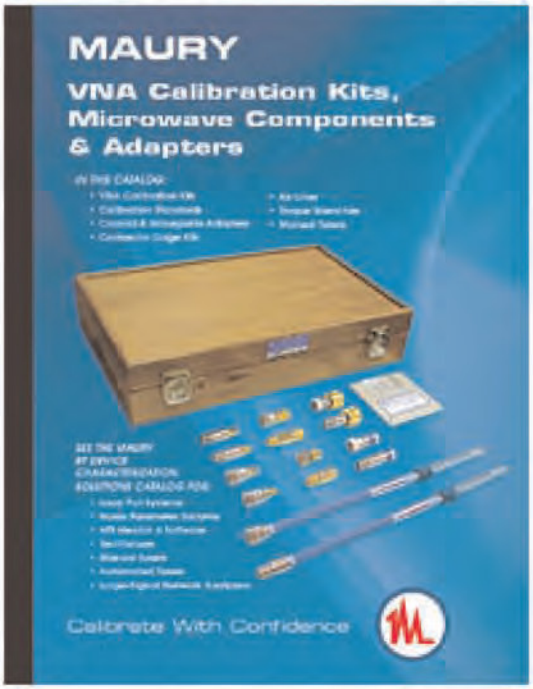

Precision VNA, PNA & ENA Calibration Kits

For Optimum Performance and Accuracy in Measurement

- 1.85mm Coaxial Calibration Kits
  - 1.85mm Coaxial Adapter Options
- 2.4mm Coaxial Calibration Kits
  - 2.4mm Coaxial Adapter Options
- 2.92mm Coaxial Calibration Kits
  - 2.92mm Coaxial Adapter Options
- 3.5mm Coaxial Calibration Kits
  - 3.5mm Coaxial Adapter Options
- 7mm Coaxial Calibration Kits
- Type N Coaxial Calibration Kits
  - Type N Coaxial Adapter Options
- Type N 75 Ohm Coaxial Calibration Kits
- TNC Coaxial Calibration Kits
- AFTNC Coaxial Calibration Kits
  - AFTNC Coaxial Adapter Options
- TNCA Coaxial Calibration Kits
  - TNCA Coaxial Adapter Options
- BNC Coaxial Calibration Kits
- OSP™ Coaxial Calibration Kits
- 14mm Coaxial Calibration Kits
- 7-16 Coaxial Calibration Kits
  - 7-16 Coaxial Adapter Options
- Waveguide Calibration Kits (Standard)
- Optimized Millimeter Waveguide Calibration Kits
- Millimeter Waveguide Calibration Kits
- Waveguide TRL Calibration Kits

Precision VNA Calibration Kit Components

In all of the Connector Types or Waveguide Sizes Shown for Cal Kits

- Coaxial and Waveguide Opens
- Coaxial and Waveguide Opens
- Coaxial Precision Air Lines & 2-Port Mismatch Air Line Sets
- Coaxial Precision Mismatches & Mismatch Sets
- Waveguide 2-Port Mismatch Standards Sets
- Connector Gages and Connector Gage Kits
- Coaxial Directional Couplers
- Torque Wrenches

Precision Adapters, Coaxial Cable Assemblies, Test Port Cable & Adapter Kits, Connectors and Manual Tuners

- In-Series Coaxial Adapters
- Between Series Coaxial Adapters
- Test Port Adapters
- Waveguide-to-Coaxial Adapters
- Waveguide Flange Adapters
- Waveguide Transmission Lines and Test Port Adapters
- Flexible and Semi-Rigid Cable Assemblies
- Precision Semi-Rigid Assemblies (90° Bends & Right Angle Test Port Adapters
- Coaxial Connectors
- Slide Screw and Stub Tuners

Visit Us Online at maurymw.com

Maury Device Characterization Systems

Maury Microwave Has the Most Complete Selection of Load Pull Solutions! We Are Your Complete Measurement & Modeling Solutions Partner!

In This Volume:

RF Device Characterization Methods

Accurate de-embedded performance evaluation of the power, intermodulation distortion, adjacent channel power, noise and network (S-parameter) characteristics of packaged or on-wafer devices under various conditions of impedance matching is the foundation of successful design, manufacture, and use of RF and microwave devices. Maury device characterization systems support the best industry-recognized test and measurement methods.

Pitfalls To Avoid When Purchasing A Device Characterization System

An automated device characterization system can greatly simplify test and measurement operations and quickly provide reliable empirically-based data for design and modeling of new products. But finding the right system is not simple. There are mistakes to be avoided if you are to maximize return on investment, achieve your test and measurement goals, and get your products to market. Here is some valuable advice from the experts at Maury.

Device Characterization Software (IVCAD, ATSv5 and AMTSv2)

Maury IVCAD software is the newest and most advanced measurement and modeling software in the market. It supports multiple load pull techniques, performs noise parameter, DC-IV and pulsed-IV measurements, and incorporates sophisticated device modeling tools. Maury's ATS software (ATSv5) includes a comprehensive set of upgrades, improvements, and additions to the classic ATS test and measurement tools.
Maury's Automated Mobile Test System software (AMTSv2) is designed specifically to automate the testing of mobile phones in transmit and receive modes, for output power and sensitivity. It now includes support for GSM, WCDMA and CDMA2000.

Load Pull and Noise Parameter Systems

Maury offers fully integrated, automated tuner-based systems configured to operate from 0.25 to110 GHz. These complete turnkey systems can be customized to support Basic (power, gain and PAE) and Advanced Load Pull characterization (modulation, optimal ACPR, CDP, and Harmonic LP). Maury Noise Parameter systems are available in electromechanical and solid state versions that can be customized to perform on-wafer or in-fixture noise parameter characterization at frequencies from 0.25 to 110 GHz.

Automated Tuners, Controllers And Hubs

Maury USB-controlled automated tuners and hubs are described in detail, with their respective specifications and applications.

Accessories

Maury offers a number of accessories to support your test bench needs, including automated tuner controllers, noise receiver modules, diplexers and triplexers, pre-matching probe mounts, manual tuners, and automated sliding shorts.

Advanced Device Characterization Systems

Maury now offers Mixed-Signal Active Load Pull systems, and the AMCAD Engineering PIV/PLP family of Pulsed IV systems.

You Have Load Pull Needs – We Have You Covered!

Maury Microwave Has the Most Complete Selection of Load Pull Solutions

MAURY's Mixed-Signal Active Load Pull Allows Wideband Modulated Impedance Control for Base Station PAs

Active and Hybrid Load Pull Using PNA-X Simplifies Harmonic Tuning with Gamma = 1

Pulsed-Bias Pulsed-RF Harmonic Load Pull for GaN and Wide Band-Gap Devices

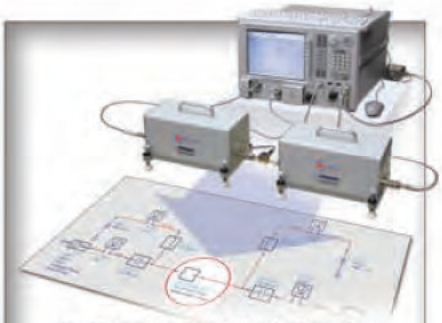

X-Parameter Modeling for First-Pass Advanced Amplifier Design at over 200W!

Ultra-Fast Noise Parameter Method Gives More Accurate Results in Less Than 1/100th the Time to 110 GHz!

Stability and Conformance Testing of Mobile Phones for GSM, CDMA, WCDMA...

Advanced Integration of On-Wafer Load Pull and Noise Parameters to 110 GHz

USB and TCP-IP Tuners for Do-It-Yourself Programing Using DLL or Direct ASCII Commands

The Most Accurate and Repeatable Manual Tuners for Simple Tuning Requirements

Maury Microwave – Your Complete Measurement & Modeling Solutions Partner

On the Web at MAURYMW.COM

MAURY MICROWAVE CORPORATION

2900 Inland Empire Blvd., Ontario, California 91764 • USA
Tel: 909-987-4715 • Fax: 909-987-1112 • Email: maury@maurymw.com

Agilent Technologies
Global Solutions Partner

Contents

Maury Device Characterization Solutions

Model Index

SOFTWARE PRODUCTS

AUTOMATED TUNERS

MANUAL TUNERS; STUB TUNERS

MANUAL TUNERS; STUB TUNERS (continued)

MANUAL TUNERS; COAXIAL SLIDE SCREW TUNERS

MANUAL TUNERS; WAVEGUIDE SLIDE SCREW TUNERS

ACCESSORIES

RF DEVICE CHARACTERIZATION SYSTEM INTEGRATION

ADVANCED RF DEVICE CHARACTERIZATION SYSTEMS

SOLID-STATE ELECTRONIC TUNER SYSTEMS

AMCAD ENGINEERING PULSED IV SYSTEMS

Automated Sliding Shorts

0.4 TO 18.0 GHz

MT999A
Automated Sliding Short

Features

- *Optimized for Low-Cost Harmonic Load-Pull Measurement*
- *50:1 Minimum Matching Range*
- *DLL Environment for Automated Applications*

MT999B
Automated Sliding Short

Applications and Benefits Overview

The MT999 series automated sliding shorts are optimized for use with Maury MT981/MT982 series tuners in applications where harmonic load-pull or tuning measurements with a high mismatch is required. When used with the appropriate triplexer or diplexer, the MT999A/B/D sliding shorts provide the capability to make the most accurate and reliable harmonic measurements possible. These easy-to-use high-performance tuners deliver a very high mismatch with superb accuracy and reliability over a broad frequency range. The MT999 series automated sliding shorts are designed for use with Maury's family of Device Characterization Software tools including the Maury ATS version 5 (or later) interactive environment and the DLL-based measurement automation environment. The ATS interactive environment is and integrated device characterization environment providing comprehensive calibration and device characterization tools for power and noise optimization. The DLL environment enables direct interface with common programming tools such as Agilent VEE™, NI Labview™, MS Visual Basic & C/C++, and Mathworks MATLAB™.

Controller

For optimum performance, the MT1020C ATS Controller is designed to provide a USB interface to non-USB sliding shorts and can be used to control up to two (2) sliding shorts simultaneously. Alternatively, the legacy MT986 GPIB-programmable ATS controller may also be used.

See Maury Data Sheet 4T-076.

Specifications

Frequency Range ..... See ***Available Models Table***

VSWR Matching Range .....See ***Available Models Table***

MT999A Step Size (Carriage) .....625 microinches[1]

MT999B Step Size (Carriage) ..... 208.75 microinches[1]

Connectors ..... Precision 7mm[2]

Accessories Provided

One (1) each MT982C12 tuner control cable and one (1) operating manual.

Recommended Accessories

MT1020C	USB controller power hub
2698C2	3/4-in. hex torque wrench
A028D	7mm connector gage kit

Available Models

Model	Frequency Range (GHz)	Matching Range		Power Capability	Vector Repeatability (Minimum)	Dimensions
		Minimum	Typical			
MT999A	0.8 — 7.5	50:1	90:1	10 W CW 100 W PEP	–40 dB	6.75" x 4.36" x 16.35" (17.1cm x 11.1cm x 41.5cm)
MT999B	3.0 — 18.0					6.75" x 4.36" x 10.49" (17.1cm x 11.1cm x 26.6cm)
MT999D	0.4 — 4.0				–35 dB	6.75" x 4.36" x 23.85" (17.1cm x 11.1cm x 60.58cm)

Dimensions for MT999A/B/D – Inches

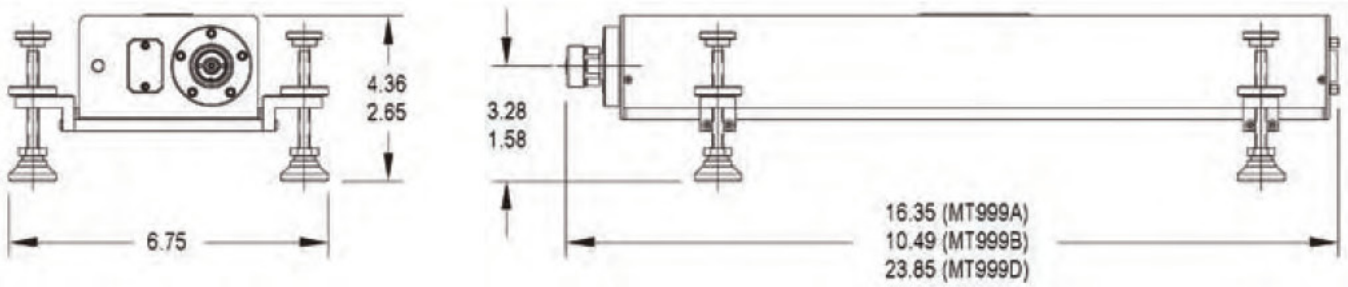

[1] Based on 1/2 stepping the drive motors.

[2] Precision 7mm male per Maury data sheet 5E-060.

Pre-Matching Probe Mounts

MT902A Series

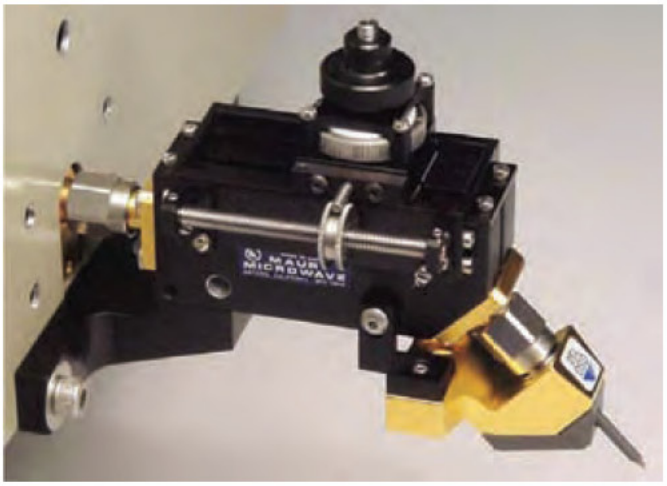

MT902A2 Pre-Matching Probe Mount on a MT989AU01 50 GHz Automated Tuner. This launch configuration is also used on MT902A1 and MT902A3.

Features

- *On-Wafer Broadband Pre-Matching*
- *Low Loss Wafer Probe Mount*
- *8.0 to 50.0 GHz*
- *Ultra High Stability Design*

General

The MT902A series of pre-matching probe mounts are highly stable, low loss wafer probe mounts used in on-wafer device characterization applications. By extending a wafer probe away from the tuner body, these mounts create additional clearance for proper probe alignment. The ultra-high stability inherent in their design eliminates the possibility of undesired movement during operation.

Specifications

Frequency Range ..... 8.0 to 50.0 GHz

VSWR Range ..... 10.1 minimum

Insertion Loss ..... 0.36dB[1]/0.45dB[2]

Power Handling ..... 10W CW, 0.5 kW peak

Connectors 2.4mm

Weight ..... 2.7 oz.

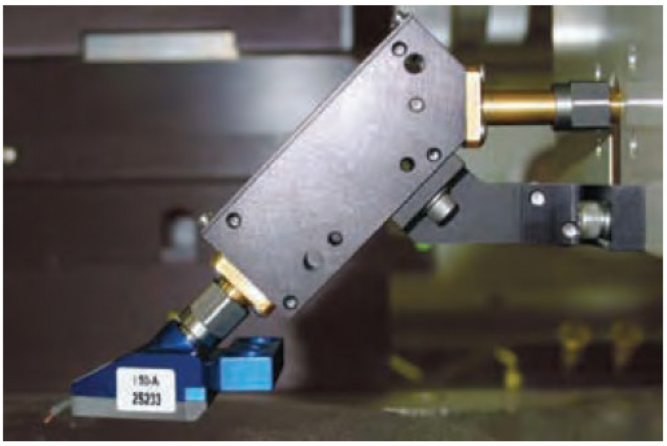

MT902A5 Basic Probe Mount on a MT984A01 50 GHz Automated Tuner. This launch configuration is also used on MT902A6 and MT902A7.

Available Models

Model	Description	Frequency Range (GHz)	Matching Range	Recommended For Use With Probe Stations
MT902A1	Basic probe mount	DC — 50.0	NA	Cascade Summit 9000
MT902A2	High frequency pre-matching probe mount	21.5 — 50.0	10:1	Cascade M150
MT902A3	Low frequency pre-matching probe mount	8.0 — 21.5	10:1	Cascade RF1
MT902A5	Basic probe mount	DC — 50.0	NA	Cascade 11K
MT902A6	High frequency pre-matching probe mount	21.5 — 50.0	10:1	Cascade 12K
MT902A7	Low frequency pre-matching probe mount	8.0 — 21.5	10:1	Cascade S300

[1] MT902A1/2/3 at 50 GHz with probe retracted.

[2] MT902A5/6/7 at 50 GHz with probe retracted.

See Maury Data Sheet 2G-035D.

Dimensions (Inches)

MT902A1, MT902A2 & MT902A3

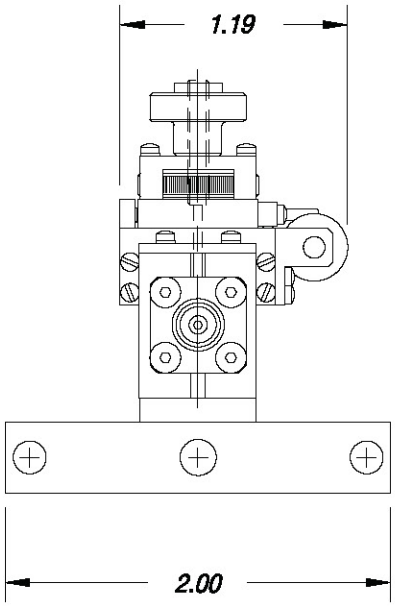

Recommended Launch Configuration for Cascade Summit 9000, M150 & RF1 Probe Stations

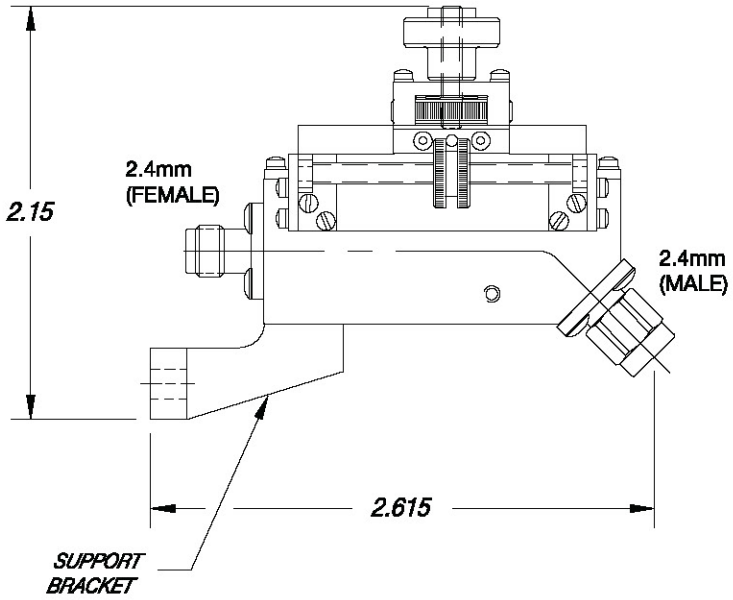

MT902A5, MT902A6 & MT902A7

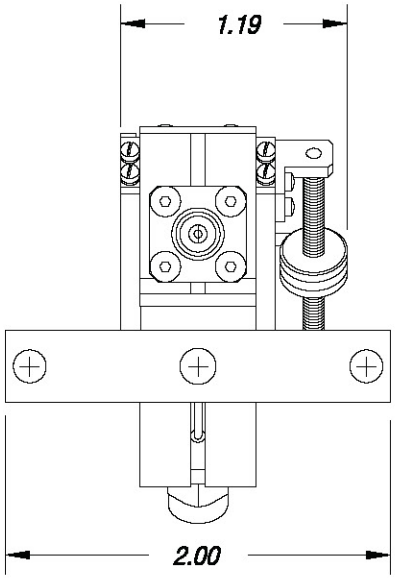

Recommended Launch Configuration for Cascade 11K, 12K & S300 Probe Stations

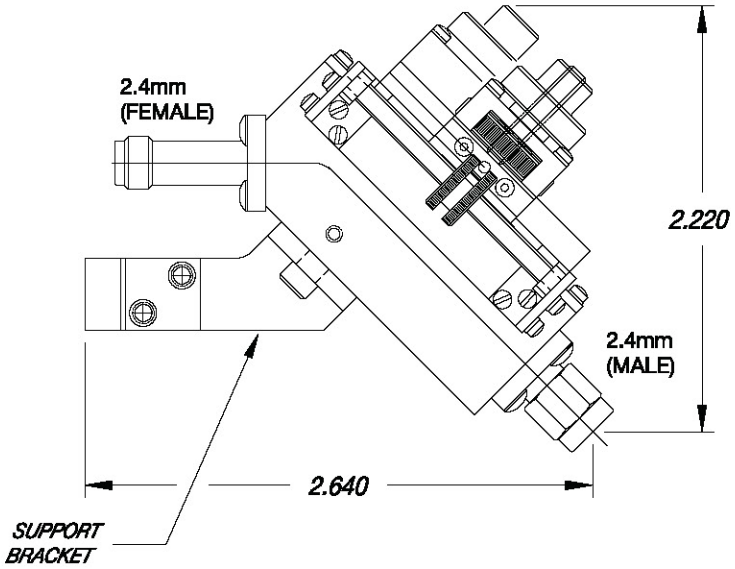

Noise Receiver Modules - MT7553 Series

10 MHz to 110 GHz

Expanding the Capabilities of Noise Figure Analyzers for Ultra-Wideband Noise Parameter Measurements

*Features**

- *Instantaneous Ultra-Wideband Measurements from 10 MHz to 50 GHz*
- *Banded Measurements from 50–75 GHz, 60–90 GHz, and 75–110 GHz*
- *Automates Noise Parameter Measurement Systems*
- *Replaces External Banded Components*
- *Integrated Downconverter, Bias Tees, Low-Noise Amplifier, and Switches*
- *Low Noise Figure*

Introduction

Noise Parameter measurements are typically performed using a Vector Network Analyzer (VNA) to measure the S-Parameters of an amplifier, and a Noise Figure Analyzer (NFA) to measure the noise figure or noise power of an amplifier. While traditional NFAs are commonly available up to 26.5 GHz, many amplifier designers wish to test their amplifiers past this frequency limit. The MT7553 series of Noise Receiver Modules enable engineers to take ultra-wideband noise parameter measurements by extending the frequency limit of the NFA to 50, 75, 90 or 110 GHz.

MT7553B 50 GHz Noise Receiver Module

The MT7553B is much more than a simple downconverter, it is the backbone of 50 GHz noise parameter measurement system. A downconverter accepts an input signal (commonly referred to as RF signal) at F1 and mixes it with local oscillator signal F2, resulting in an intermediate frequency (IF) of F1-F2, a frequency able to be directly measured by a NFA. The Noise Receiver Module consists of a downconverter including integrated mixer and local oscillator, as well as integrated bias networks to power the device under test, integrated RF switches to switch between VNA and NFA paths, and integrated low-noise amplifier (LNA) to improve receiver noise figure. In essence, the MT7553 replaces the entire output block, or receiver module, of our noise parameter measurement system and is designed for easy on-wafer integration. Simply connect the VNA, NFA and bias supplies to the proper module ports, and begin taking measurements. For the first time ever, fully automated frequency-swept noise parameters can be measured between 10 MHz and 50 GHz on-wafer without disconnecting or changing a single component or cable, with extremely fast and accurate results.

MT7553B01 50 GHz PNA-X Noise Receiver Module

The MT7553B01 has been tailored for Agilent Technologies' new "one-box" solution, the PNA-X. Because the Noise Parameter and S-Parameter ports on the PNA-X are one and the same, the MT7553B01 uses a transfer switch to internally combine both pathways into one external port, easily connected to the PNA-X. See Maury Microwave article reprint 5A-042 for the speed and accuracy benefits of using the PNA-X over traditional methods.

* See ***Available Models*** table on page 47.

See Maury Data Sheet 4T-085.

MT7553M Millimeter Wave Noise Receiver Module

The MT7553M is designed for full millimeter-wave noise parameter measurements within the TE10 waveguide band of operation. The MT7553M downconverts noise power densities from the frequency of interest to the NFA bandwidth using a double-side band swept LO technique. The MT7553M is available between 50-75 GHz (WR15), 60-90 GHz (WR12) and 75-110 GHz (WR10).

Available Models

Model	Input Frequency (System)	Output Frequency (NFA)	LO	Mixer	LNA	Bias Tee	RF Switch	VNA/NFA Ports	Noise Figure		Connector
									Typ	Max	
MT7553B	0.01 – 50.0 GHz	0.01 – 26.5 GHz	Internal	Internal	Internal	Internal	Internal	Separate	15	20	2.4mm
MT7553B01	0.01 – 50.0 GHz	0.01 – 26.5 GHz	Internal	Internal	Internal	Internal	Internal	Combined	15	20	2.4mm
MT7553M15	50.0 – 75.0 GHz	0.01 – 26.5 GHz	Internal	Internal	Internal	External	External	Separate	12	12	WR15
MT7553M12	60.0 – 90.0 GHz	0.01 – 26.5 GHz	Internal	Internal	Internal	External	External	Separate	12	12	WR12
MT7553M10	75.0 – 110.0 GHz	0.01 – 26.5 GHz	Internal	Internal	Internal	External	External	Separate	12	12	WR10

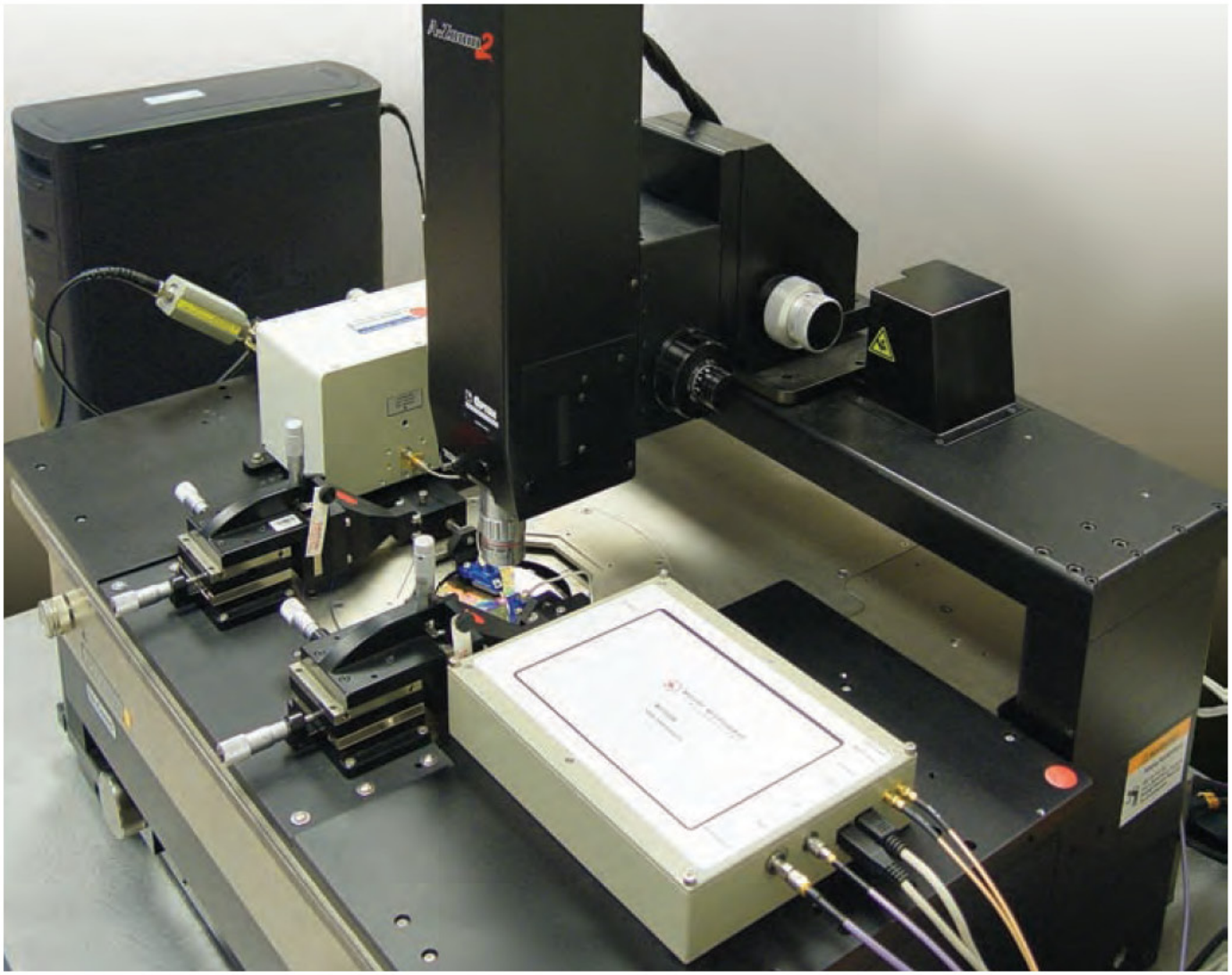

MT7553B in a typical on-wafer setup for making noise parameter measurements.

Precision Low Loss Coaxial Triplexers

9677 Series

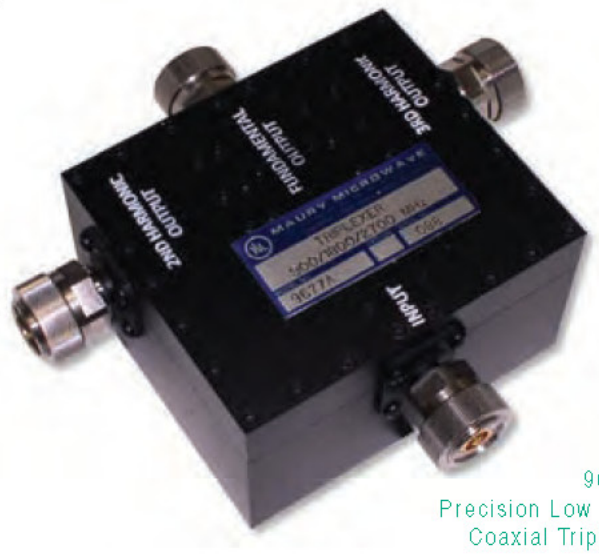

9677A
Precision Low Loss
Coaxial Triplexer

Description

The Maury Microwave 9677 series is a family of precision low loss triplexers designed to serve as networks for separating harmonically related signals in automated device characterization applications such as harmonic load pull measurement.

The 9677( ) triplexer is composed of one low pass filter and two bandpass filters with a common input port and three separate output ports (Fo, 2Fo and 3Fo). These bands are harmonically related. A direct current path exists between the COMMON and Fo ports, which allows DC bias for the DUT.

Frequency specifications for the filters in the 9677 standard models are detailed in the ***Available Models*** below. Triplexers with filters for other frequencies (tailored to user specifications) can be provided as custom ordered models. Please contact our Sales Department for more information.

Typical Dimensions (Inches)

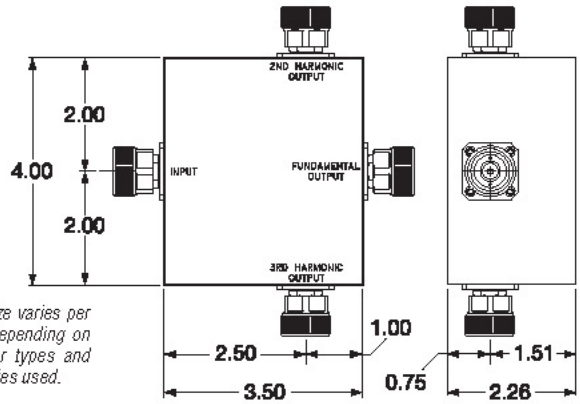

Note:
Actual size varies per model, depending on connector types and frequencies used.

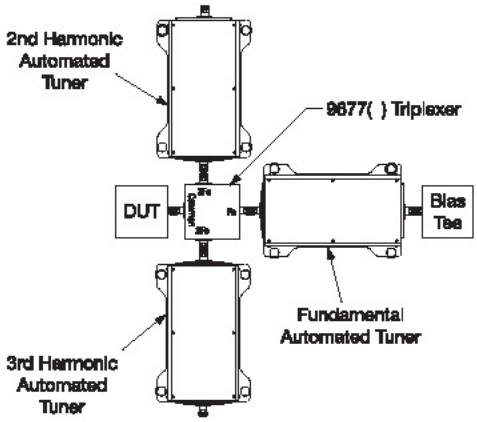

Typical Harmonic Load Pull Block Diagram

Available Models

Model Series	Center Frequency (MHz)[1]			Bandwidth for Insert. Loss (MHz)			Minimum Rejection (dB)[2]			In-Band VSWR[3] (Max)	Insertion Loss[4] Max / Goal (dB)	Average Power (Min)	Connectors			
	Fo	2Fo	3Fo	Fo	2Fo	3Fo	Fo	2Fo	3Fo				Fo Input	Fo Output	2Fo Output	3Fo Output
9677A( )	900	1800	2700	200	400	600	40	40	40	1.5:1	0.4 / 0.2	100 W	7mm	7mm	7mm	7mm
9677B( )	2140	4280	6420	200	400	600	40	40	40	1.5:1	0.4 / 0.2	100 W	7mm	7mm	7mm	7mm
9677C( )	1960	3920	5880	200	400	600	40	40	40	1.5:1	0.4 / 0.2	100 W	7mm	7mm	7mm	7mm
9677E( )	1900	3800	5700	200	400	600	40	40	40	1.5:1	0.4 / 0.2	100 W	7mm	7mm	7mm	7mm
9677F( )	2100	4200	6300	200	400	600	40	40	40	1.5:1	0.4 / 0.2	100 W	7mm	7mm	7mm	7mm
9677G( )	2000	4000	6000	200	400	600	40	40	40	1.5:1	0.4 / 0.2	100 W	7mm	7mm	7mm	7mm
9677H( )	455	910	1365	200	400	600	40	40	40	1.5:1	0.4 / 0.2	100 W	3.5mm	3.5mm	3.5mm	3.5mm
9677J( )	1800	3600	5400	200	400	600	40	40	40	1.5:1	0.4 / 0.2	100 W	7mm	7mm	7mm	7mm
9677K( )	2300	4600	6900	200	400	600	40	40	40	1.5:1	0.4 / 0.2	100 W	7mm	7mm	7mm	7mm
9677L( )	2500	5000	7500	200	400	600	40	40	40	1.5:1	0.4 / 0.2	100 W	7mm	7mm	7mm	7mm
9677M( )	2700	5400	8100	200	400	600	40	40	40	1.5:1	0.4 / 0.2	100 W	7mm	7mm	7mm	7mm
9677N( )	2900	5800	8700	200	400	600	40	40	40	1.5:1	0.4 / 0.2	100 W	7mm	7mm	7mm	7mm
9677Q( )	2450	4900	7350	200	400	600	40	40	40	1.5:1	0.4 / 0.2	100 W	7mm	7mm	7mm	7mm
9677R( )	5250	10500	15750	200	400	600	40	40	40	1.5:1	0.4 / 0.2	100 W	7mm	7mm	7mm	7mm
9677T1	5800	11600	17400	200	400	600	40	40	40	1.5:1	0.4 / 0.2	100 W	7mm	3.5mm	3.5mm	3.5mm
9677T04	1500	3000	4500	200	400	600	40	40	40	1.5:1	0.4 / 0.2	100 W	7mm	7mm	7mm	7mm
9677T05	400	800	1200	100	200	300	30	30	30	1.5:1	0.4 / 0.2	100 W	3.5mm	3.5mm	3.5mm	3.5mm
9677T06	1845	3690	5535	270	540	810	40	40	40	1.5:1	0.4[5] / 0.2	100 W	7mm	7mm	7mm	7mm
9677T07	1885	3770	5655	200	400	600	40	40	40	1.5:1	0.4 / 0.2	100 W	7mm	7mm	7mm	7mm

1 For insertion loss.
2 Fo at harmonic bands; 2Fo at Fo and 3Fo; 3Fo at 2Fo.
3 DC through the bandwidth for insertion loss.
4 Within the bandwidth for insertion loss.
5 For 9677T06 only, the maximum dB is 0.4 at Fo and 2Fo, but is 0.45 at 3Fo.

Precision Low Loss Coaxial Diplexers

9677 Series

9677D21
Precision Low Loss
Coaxial Diiplexer

Description

The 9677D( ) diplexer is composed of one lowpass filter and one bandpass or highpass filter with a common input port (COMMON) with two separate output ports, Fo and 2Fo. These filters are harmonically related. A direct current path exists between the COMMON and Fo ports. This path allows DC bias for the DUT.

Frequency specifications for the filters in the 9677D( ) standard models are detailed in the ***Available Models*** below. Diplexers with filters for other frequencies (tailored to user specifications) can be provided as custom ordered models. Please contact our Sales Department for more information.

Typical Dimensions (Inches)

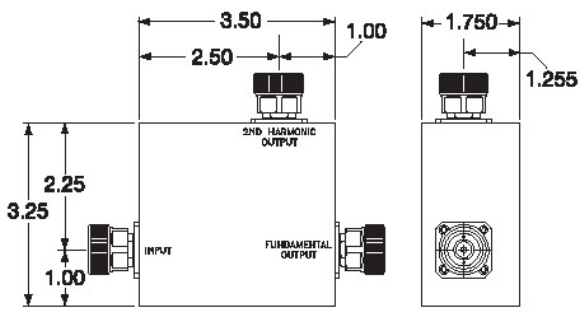

Note:
Actual size varies per model, depending on connector types and frequencies used.

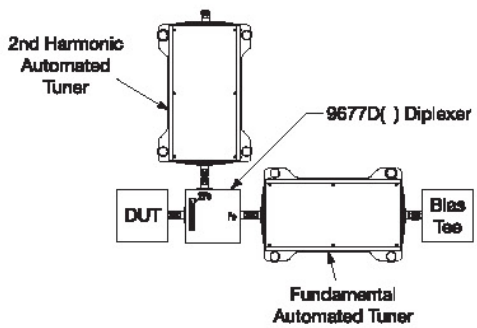

Typical Harmonic Load Pull Block Diagram

Available Models

Model Series	Center Frequency (MHz)[1]		Bandwidth for Insert. Loss (MHz)		Minimum Rejection (dB)[2]		In-Band VSWR[3] (Max)	Insertion Loss[4] Max / Goal (dB)	Average Power (Min)	Connectors		
	Fo	2Fo	Fo	2Fo	Fo	2Fo				Fo Input	Fo Output	2Fo Output
9677D1	10100	20200	200	400	40	40	1.5:1	0.4 / 0.2	100 W	3.5mm	7mm	7mm
9677D2	2100	4200	200	400	40	40	1.5:1	0.4 / 0.2	100 W	7mm	7mm	7mm
9677D3	910	1820	200	400	40	40	1.5:1	0.4 / 0.2	100 W	7mm	7mm	7mm
9677D4	1800	3600	200	400	40	40	1.5:1	0.4 / 0.2	100 W	7mm	7mm	7mm
9677D5	943	1885	200	400	40	40	1.5:1	0.4 / 0.2	100 W	7mm	7mm	7mm
9677D6	1960	3920	200	400	40	40	1.5:1	0.4 / 0.2	100 W	7mm	7mm	7mm
9677D7	910	1820	200	400	40	40	1.5:1	0.4 / 0.2	100 W	3.5mm	3.5mm	3.5mm
9677D8	1900	3800	200	400	40	40	1.5:1	0.4 / 0.2	100 W	3.5mm	3.5mm	3.5mm
9677D9	943	1885	200	400	40	40	1.5:1	0.4 / 0.2	100 W	3.5mm	3.5mm	3.5mm
9677D10	1960	3920	200	400	40	40	1.5:1	0.4 / 0.2	100 W	3.5mm	3.5mm	3.5mm
9677D11	2100	4200	200	400	40	40	1.5:1	0.4 / 0.2	100 W	3.5mm	3.5mm	3.5mm
9677D12	838.5	1673	25	50	40	40	1.5:1	0.4 / 0.2	100 W	7mm	7mm	7mm
9677D13	900	1800	200	400	40	40	1.5:1	0.4 / 0.2	100 W	7mm	7mm	7mm
9677D14	1900	3800	200	400	40	40	1.5:1	0.4 / 0.2	100 W	7mm	7mm	7mm
9677D15	2000	4000	200	400	40	40	1.5:1	0.4 / 0.2	100 W	7mm	7mm	7mm
9677D16	8450	16900	200	400	40	40	1.5:1	0.4 / 0.2	100 W	7mm	7mm	3.5mm
9677D17	10000	20000	200	400	40	40	1.5:1	0.4 / 0.2	100 W	3.5mm	3.5mm	3.5mm
9677D18	2400	4800	200	400	40	40	1.5:1	0.4 / 0.2	100 W	7mm	7mm	7mm
9677D19	2000	4000	200	400	40	40	1.5:1	0.4 / 0.2	100 W	3.5mm	7mm	3.5mm
9677D20	10000	20000	200	400	40	40	1.5:1	0.4 / 0.2	100 W	3.5mm	7mm	3.5mm
9677D24	1257.5	2515.0	200	400	40	40	1.5:1	0.4 / 0.2	100 W	3.5mm	7mm	3.5mm

1 For insertion loss.
2 Fo at harmonic bands; 2Fo at Fo bands.
3 DC through the bandwidth for insertion loss.
4 Within the bandwidth for insertion loss.

MT964 Load Pull Test Fixtures

Low-loss Test Fixtures For Load Pull and Other Power Applications

Features

- Low Insertion Loss for High VSWR Tuning
- Multiple Connector Configurations
- 50 Ω and Transformers Available
- Heatsinks and Fans Available
- Water Cooling Available

MT964B1
7mm Load Pull Test Fixture

MT964A1
7mm Load Pull Test Fixture

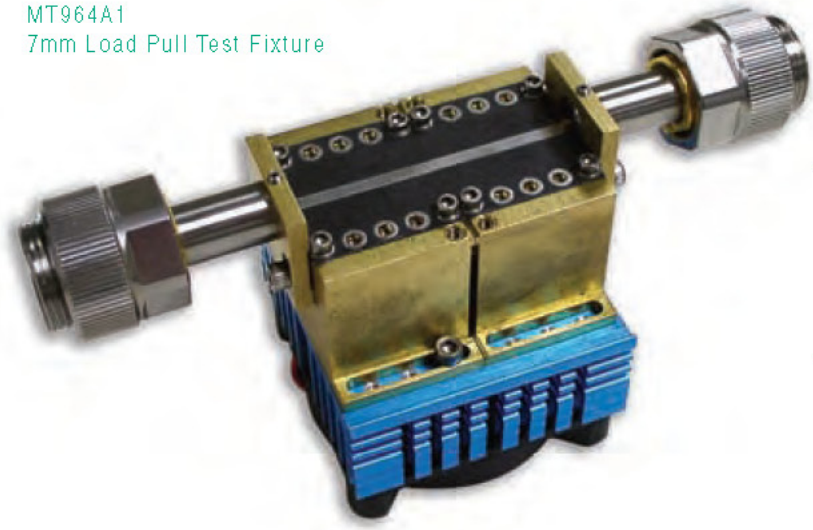

Accessories Provided

- TRL Calibration Kit
- One Device Insert

Optional Accessories

- Water Cooling
- Additional Device Inserts

Available Models

Model	Frequency Range	Impedance	Connector	Power Handling[1]
MT964A1	0.1 – 18.0 GHz	50 Ω	7mm	250 W CW
MT964A2	0.1 – 18.0 GHz	50 Ω	3.5mm	250 W CW
MT964B1	0.8 – 18.0 GHz	10 – 12 Ω	7mm	250 W CW
MT964B2	0.8 – 18.0 GHz	10 – 12 Ω	3.5mm	250 W CW

[1] Proper heat dissipation of DUT is required.

Typical S21 Performance of MT964A1

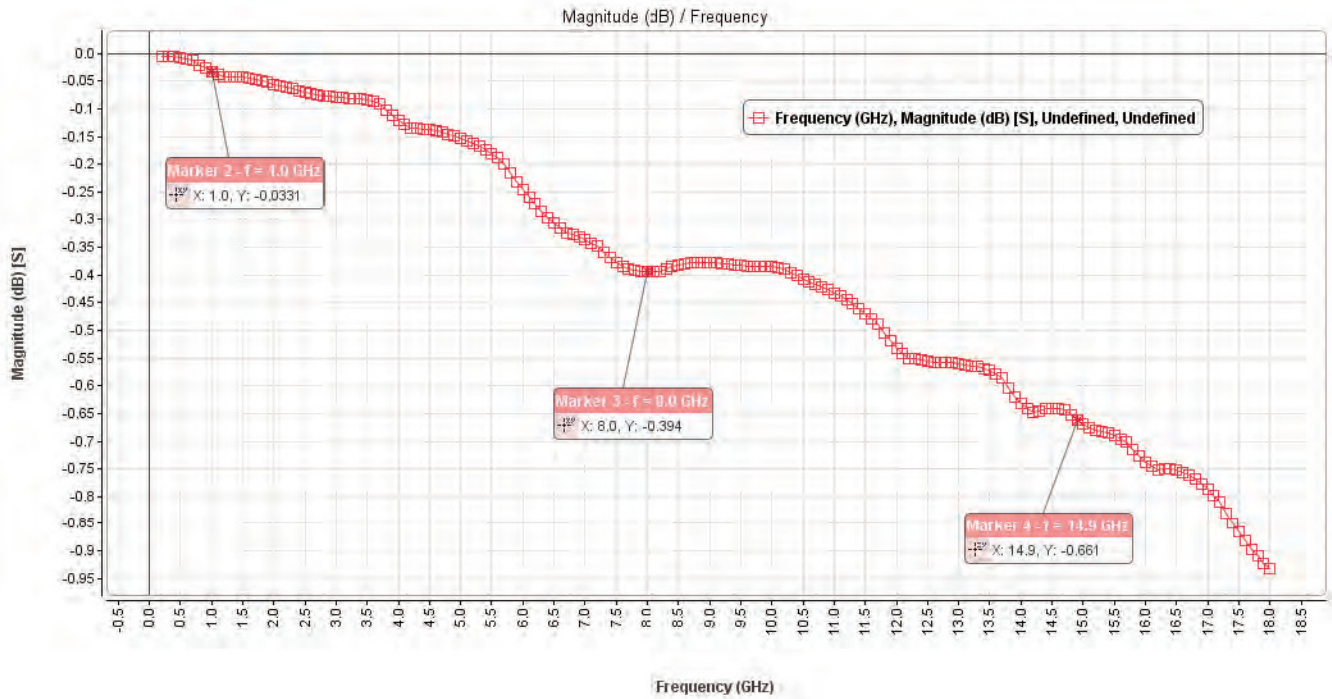

Typical S11 Performance of MT964B2